Edited by Foxit PDF Editor
Copyright (c) by Foxit Software Company, 2003 - 2009
For Evaluation Only.

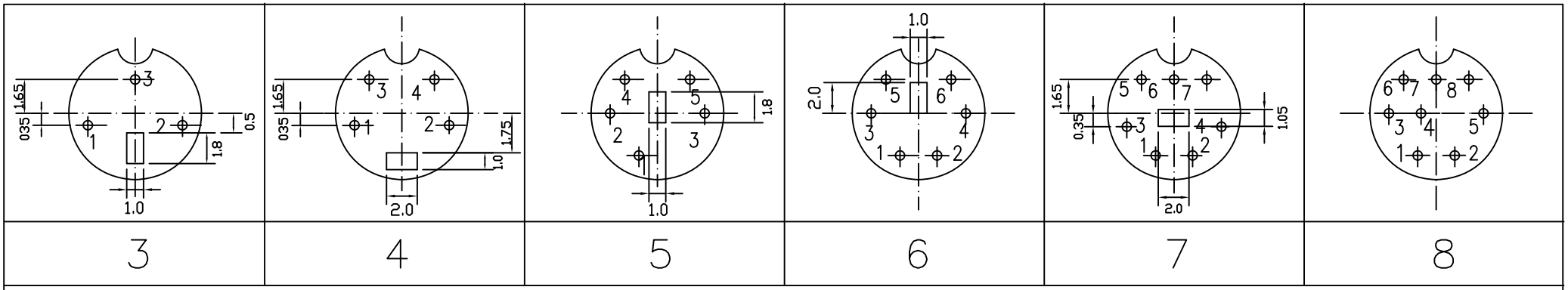

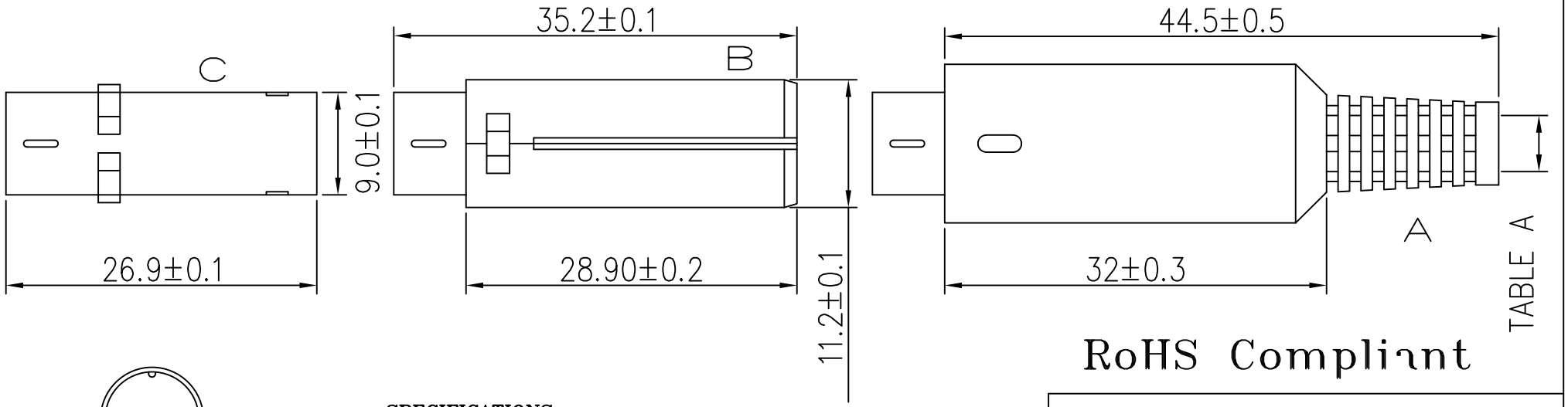

RoHS Compliant

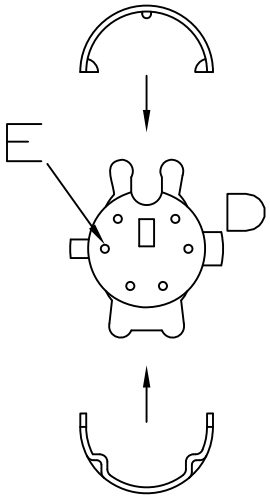

SPECIFICATIONS:

1.RATING:100V AC 1A MAX
2.INSULATION RESISTANCE: 50M OHM MIN AT 500V DC.
3. DIELECTRIC STRENGTH: 500V AC / 1 MINUTE.
4.INSERTION FORCE: 4.5KG MAX.
5.WITHDRAWAL FORCE: 0.9KG ~ 3KG.

	7.0ø BACK SHELL
	6.0ø BACK SHELL
○	5.0ø BACK SHELL (STANDARD)
	COVER DIM.

TABLE A

MATERIAL:
A.COVER: EVA+PE-LL
B.SHELL: ABS(PA-757)
C.METAL SHIELD:
BRASS NICKEL PLATED
D.HOUSING: NY6+FB (PA-1010C2)
E.CONTACT:
BRASS SILVER PLATED

TOLERANCES .X± 0.2 .XXX± / .XX± 0.1 ANGLES /	PART NUMBER 1102 SER
mm SCALE /	DESCRIPTION Mini Din plug Ass'y Type
DRAFT W.RAY092710'	
CHECK JANNE HUNG	REV. 111710'
APPROVAL DANNY HSU	SHEET 1/1