"*" Pivot Dimension

RoHS Component

PO(X)	A	B	WIRE	CURRENTRATING(A)
1	2.5	4.5	12#	10
2	3.6	5.0	10#	20
3	4.4	5.5	8#	30
4	5.5	5.5	6#	40

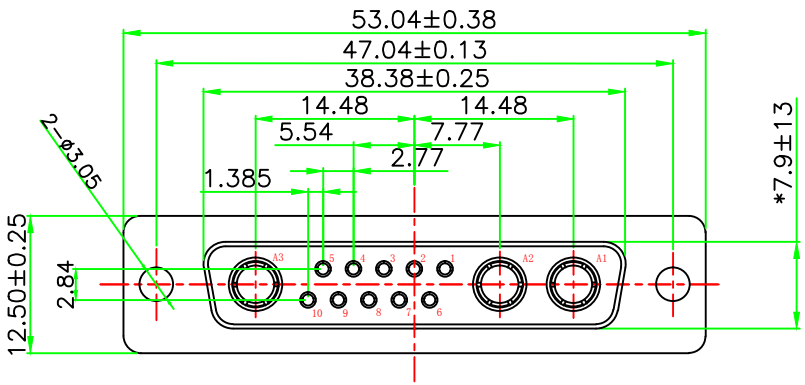

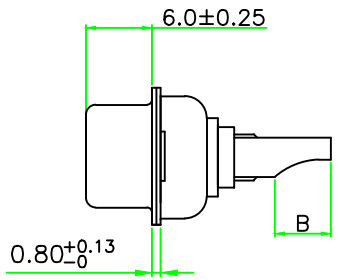

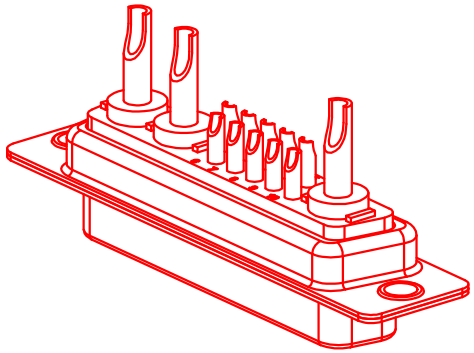

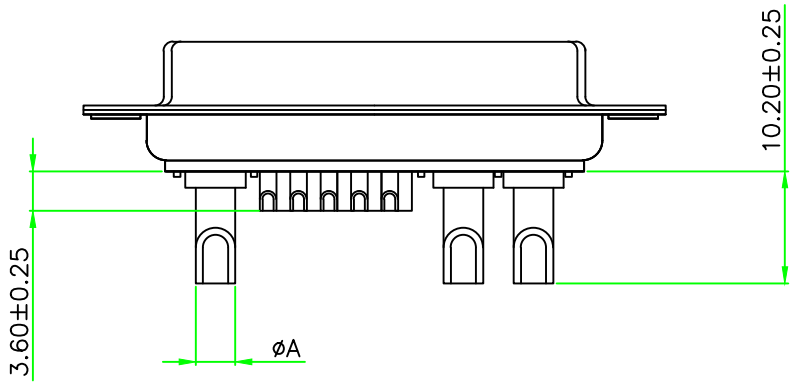

MATERIALS AND FINISH
SHELL:STEEL OR COPPER ALLOY MATERIAL,Tin/Ni OR Au FINISHED.
CONNECTOR INSULATOR:PBT THERMOPLASTIC,30% GLASS FILLED,UL 94V-0 RATED.
HIGHT POWER CONTACT :COPPER ALLOY MATERIAL,GOLD PLATED.
CONNECTOR WITH SIGNAL CONTACT MATERIAL: COPPER ALLOY , GOLD PLATED.
ELECTRICAL CHARACTERISTICS
HIGH POWER CONTACT CURRENT RATING:10,20,30 OR 40 AMPS.
CONNECTOR WITH SIGNAL CONTACT CURRENT RATING :3.0 AMPS.
THE WORKING VOLTAGE:300V.
HIGH POWER CONTECT RESISTANCE:2.7 MILLIOHMS MAX.
DIELECTRIC WITHSTANDING VOLTACE:1000 V AC FOR 1 MINUTE.
INSULATION RESISTANCE:2000 MEGAOHMS MIN.
TEMPERATURE RATING:-55° ~+125° .

TOLERANCE: X. ±0.38 X.X ±0.25 X.XX ±0.13 X.° ±3° X.X° ±1°	DRAWED BY :	DATE : 2009.09.11	PART NAME: 13W3 母 电流焊线式传统铆合
	CHECKED BY:	DATE : 2009.09.12	DRAW NO. / PART NO.
UNIT: mm [inch]	APPROVED BY:	DATE : 2010.01.30	REMARK / MOLD NO.
SCALE:1:1 SIZE: A4			